BT Module

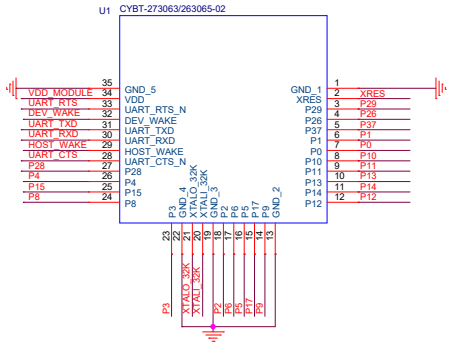

Reset

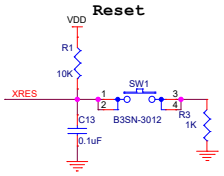

Recover

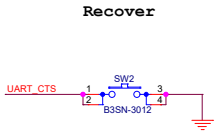

LED

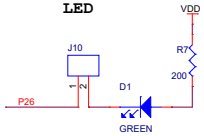

Current Measurement Jumper

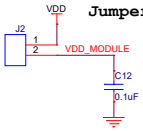

User Button

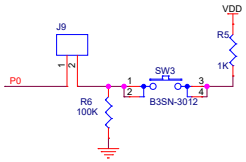

HCI UART

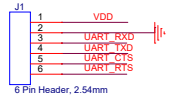

32K

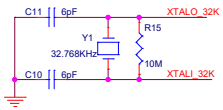

USB to Serial

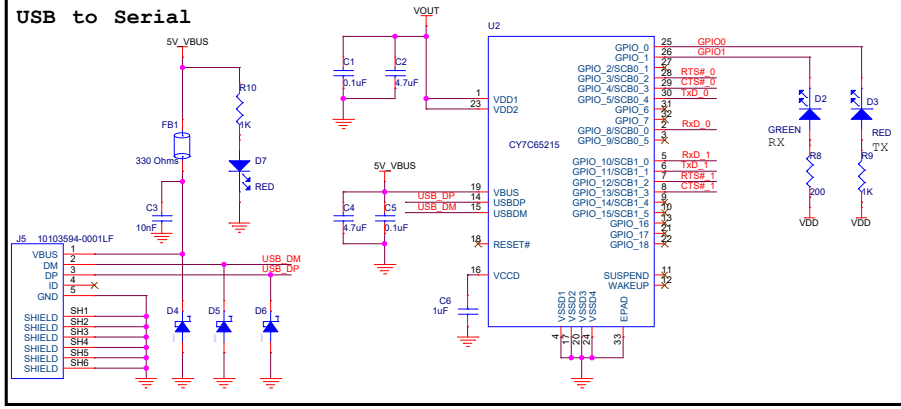

HCI UART

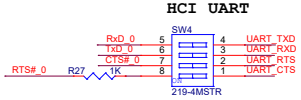

PUART

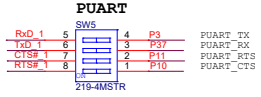

Arduino Connector

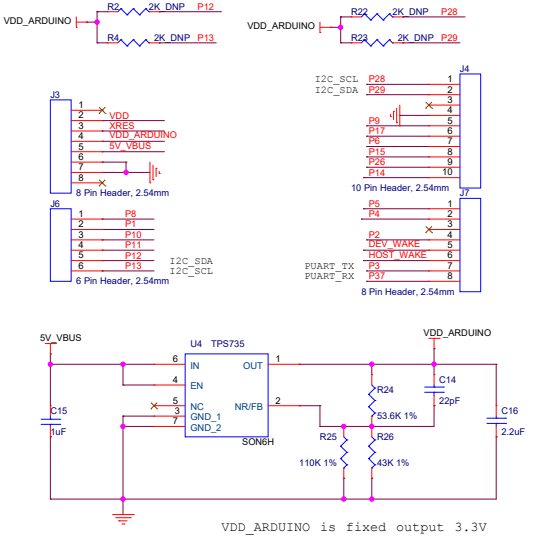

POWER

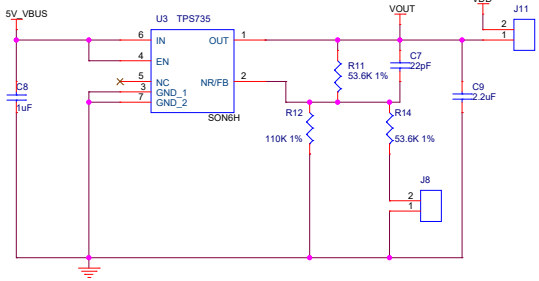

TABLE: VOLTAGE SELECTION JUMPER SETTINGS

JUMPER SETTING	O/P VOLTAGE
SHORT 1 & 2	3.0V
REMOVE JUMPER	1.8V

Vout = 1.208x(RFB1 + RFB2)/RFB2

Title	CYBT-273063_263065-EVAL	
Size	Document Number 630-20137-01	Rev 1.0_2
Date: MAR 23, 2020	Sheet 1 of 1	